APP CRS	Rwy ldg	4404
172°	TDZE	3454
	Apt Elev	3454

RNAV (GPS) RWY 17
PANHANDLE-CARSON COUNTY (T45)

RNP APCH - GPS.

Use Rick Husband Amarillo Intl altimeter setting; when not received, use Borger altimeter setting and increase all MDA 40 feet.

NA

MISSED APPROACH: Climb to 5500 direct WUXEL and hold.

AMA ASOS	AMARILLO APP CON ★	UNICOM	
118.85 350.3	119.5 307.0	122.7 (CTAF)	123.5 L

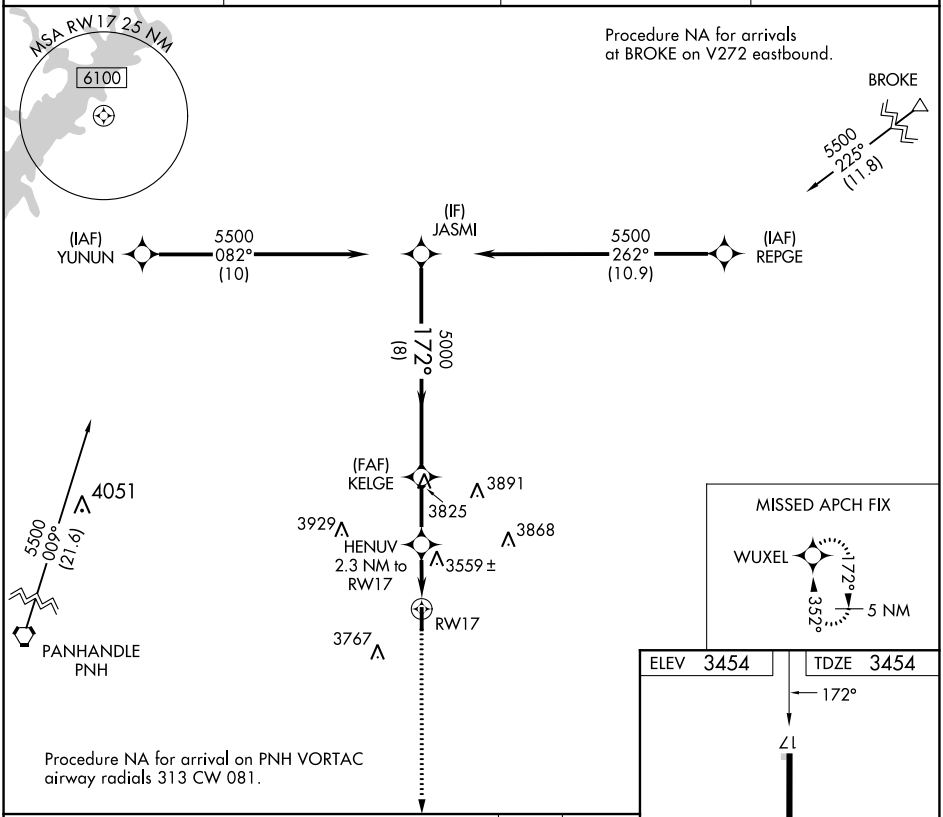

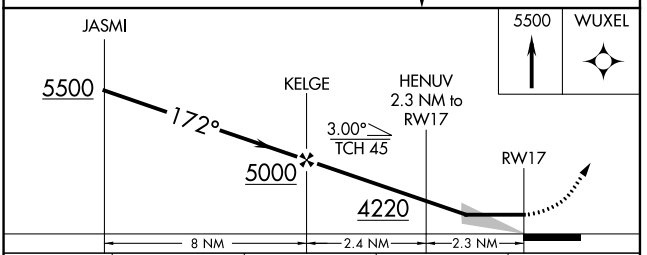

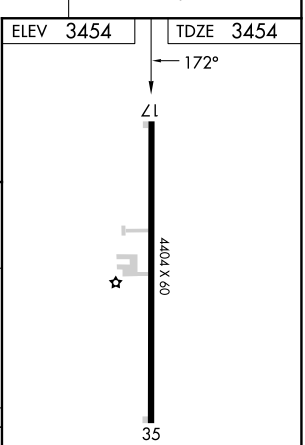

CATEGORY	A	B	C	D
LNAV MDA	3900-1 446 (500-1)		3900-1⅜ 446 (500-1⅜)	NA
C CIRCLING	4140-1 686 (700-1)		4140-2 686 (700-2)	NA

MIRL Rwy 17-35 L

SC-2, 22 FEB 2024 to 21 MAR 2024
SC-2, 22 FEB 2024 to 21 MAR 2024